FENCE QUARTER
Fence Products and Tools

General Railing System Construction Overview

How to build a Simple Deck Railing

This Deck Railing Construction Manual is a basic guideline and it is your responsibility to follow all local building codes, use common sense and understand the available attaching methods available for the best connection for the safest deck possible.

Important Safety Notes:

- It is the Installers responsibility to understand the local Building Codes
- Fence Quarter will not be responsible for the following connections: Post to Deck: The Craftsman, Contractor, Homeowner, Builder or combination thereof shall ensure that the posts to the deck railing system are properly attached to the deck floor frame with appropriate and common engineered methods Upper and Lower Rails to Post: It is the responsibility of the Craftsman, Contractor, Homeowner, Builder or combination thereof to secure the rail to the posts, on either side of the upper and lower rail connection to the posts in a way that is properly engineered or strong enough to withstand forces that may apply brunt forces against the connection.
- Fence Quarter's Deck Railing Inserts are built exceptionally well. Our job is to ensure the railing insert withstands blunt forces that meet building codes and that the Insert has a good connection to the upper and lower rails.

Read above before proceeding

We are not liable for any deck assembly failures. This guide is just that, a guide – but truly helpful!

For Safety, please make sure you read the first page of this manual

The Set Up

There are many different styles of posts and frames you can choose to make or have constructed. The deck railing frame shown below is a classic look, however it is the mechanics that will make the difference to a well-built railing system.

Deck railings consist of a three-point system, Posts, Rails and Infill or an Infill like a Deck Railing Insert provided by Fence Quarter. Each of these attachment points are critical for the safety of a deck railing system and each rely on the quality of the attachments whereas the posts are attached mechanically to the deck, the rails both upper and lower are mechanically attached to the posts and the infill is mechanically attached to the upper and lower rails.

This guide on a typical wood railing construction will focus on how to assemble a wood deck railing frame. Once the frame is completed, Fence Quarter builds the Infill to fit perfectly; then it is sent to you to install within a couple of hours. This way you do not have to cut each baluster and worry about positioning. This will save you quite a bit of time and cost.

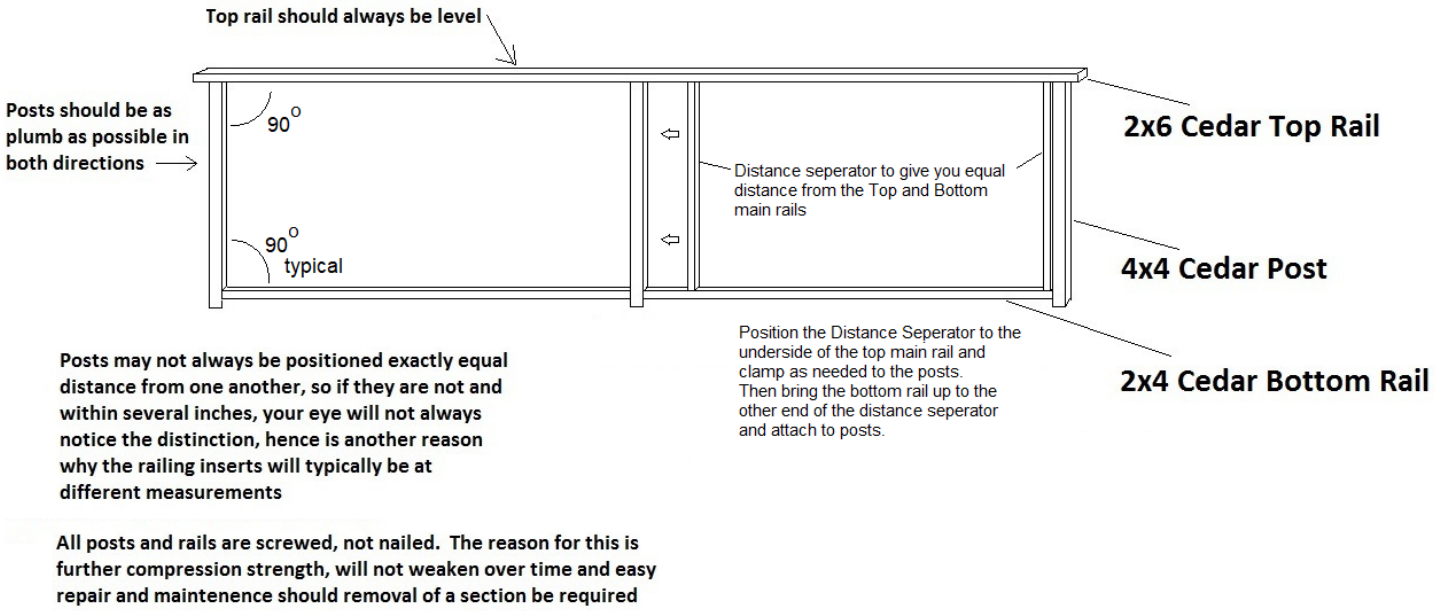

For Safety, please make sure you read the first page of this manual

Step 1: Installing Posts

Your existing deck may have a water proofing system or slat configuration like shown below. If your deck has a water proofing system, you will need to consult and perhaps hire a waterproofing deck surfacing Contractor to ensure your posts are properly sealed and integral to your water-proofing system used. It is advised not to notch a post at the connection to the deck as it will weaken the post. Usually the post is secured on the inside of the facia boards.

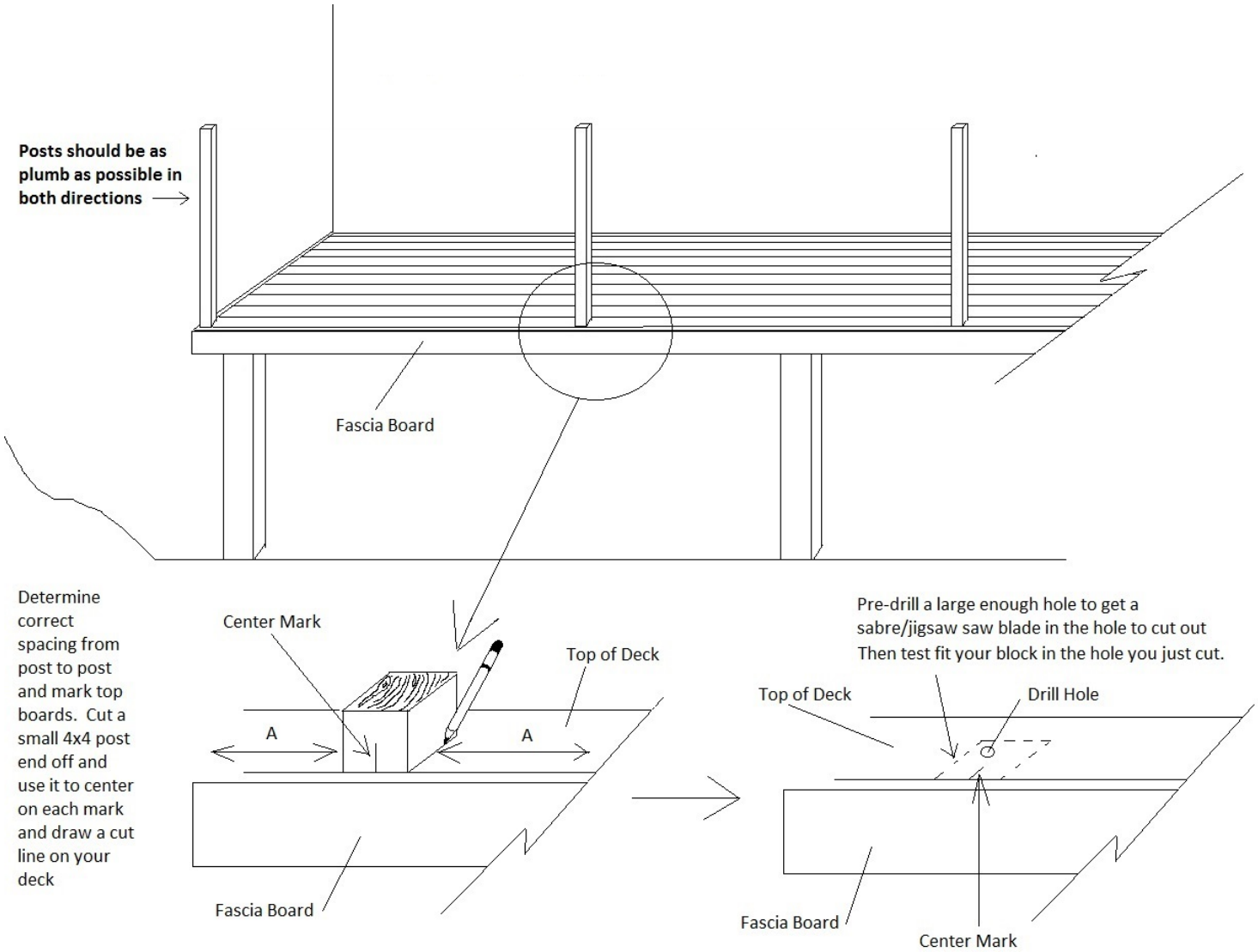

For Safety, please make sure you read the first page of this manual

Step 1: Installing Posts - Continued

With most applications we have found Contractors secure a post to both the fascia board and the joists as shown below, sometimes with lag bolts, sometimes with screws and on a rare occasion, nails. There is an array of hardware available you can find at your local hardware store. The positioning of the joists often dictates the location of the post and is why when some joists interfere with centering and position of the post, notching a post would be one possible option, but you do want to try and avoid this as it can weaken the post and over time rot out faster.

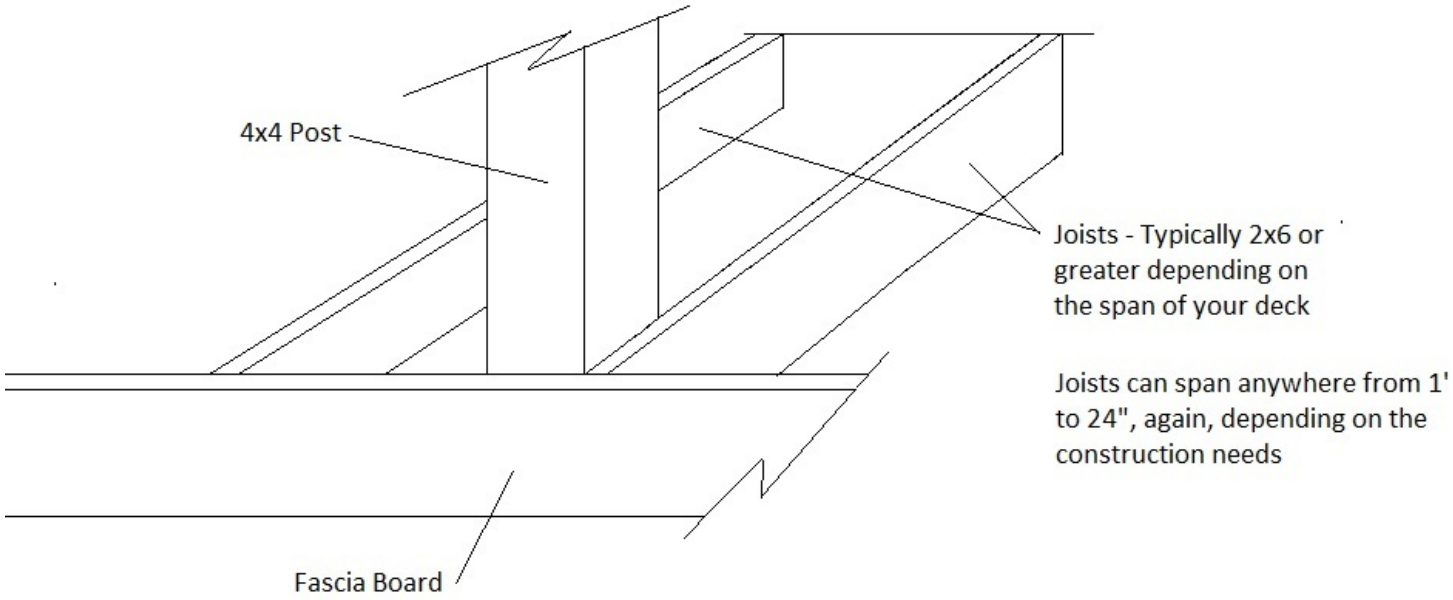

Tip: When selecting lumber for your bottom and top rails, place one end of the lumber on the ground and hold the other end so you can look down the entire length of the lumber. A quality project depends on selecting good pieces. Most lumber yards allow you to choose your lumber. When looking down the lumber, you want to select lumber that is not cupped or bowing in any other direction and is as flat as possible. Also, a good selection includes looking for as few defects such as band marks when lumber mills band pallets, or knots that are falling out or the knot is on edges and may fall out at a later time.

Step 1: Installing Posts – Continued

In our experience, the best way to secure a post to a deck is following the below three steps, however, there are many variations you can use. This method will not only provide a plumb post but make your post very ridged. If lag bolts are used, they will need to be checked six months from installation to ensure they are snug, and then they will typically stay snug. If you are using through bolts, they will need to be tightened also after the first six months but checked every several years for loosening nuts. Lock washers will always benefit a through bolt nut from loosening. The reason you need to check the hardware at a later time is the lumber usually used has a high moisture content and will need time to dry. When the lumber dries a bit, it will tend to shrink, loosening the hardware.

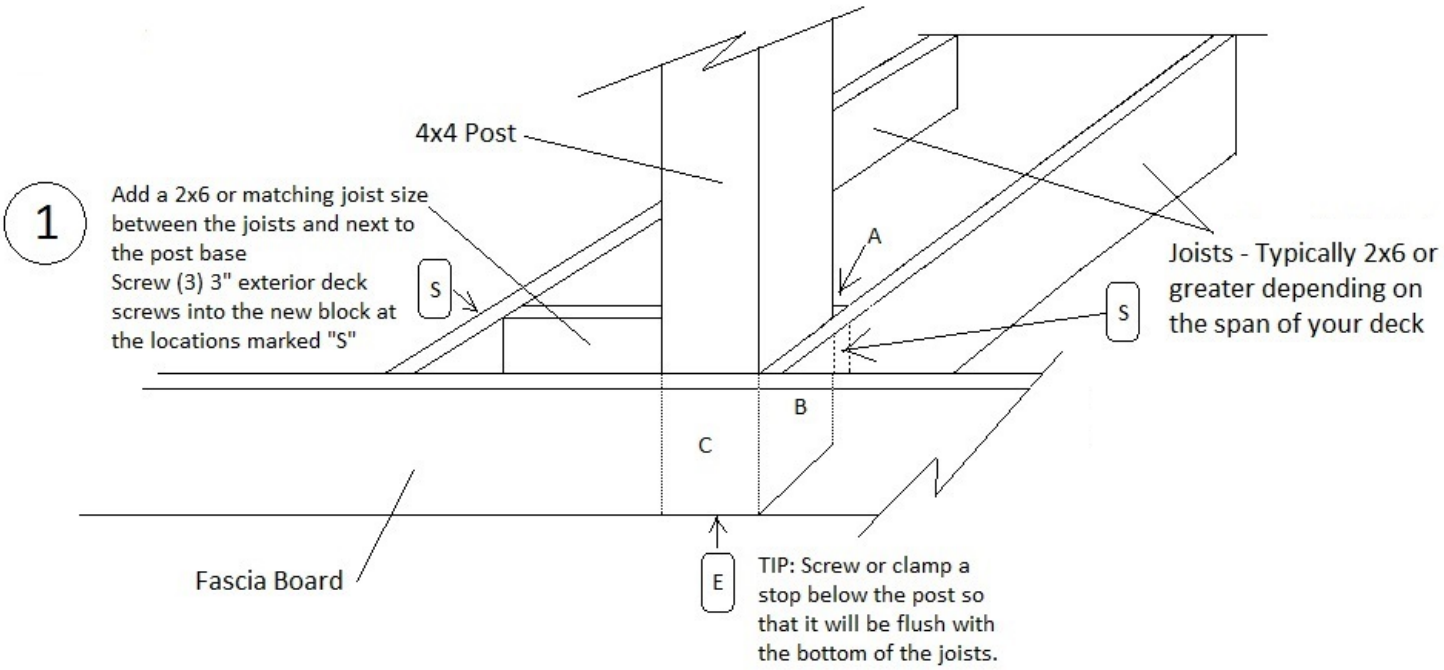

Tip: Using the Exterior Deck Star Bit Screw, or as known as the T20 Torx, 3" long is a superior screw to most other screws as it will prevent heads from stripping and is easier to remove should you need to now and in the future.

Tip: When cutting, cut as slow as possible. This will encourage burnishing the ends making a smoother and tighter grain pattern. If you rush a cut, it will be rougher and promote faster rot.

2

Before cutting your posts, verify that the very top outer edge of your deck is level.

If Not Level: If it is not level, you can cut your posts slightly longer than needed, run a string line or level and then trim the tops off. See the illustration below.

If Level: Then you will want to cut all your posts the same size. You can do this in one of two ways:

1. Cut the post so you are at your desired height from your finished deck surface but leave about a half inch shy of flushing with the bottom of the deck joists. In this method, you have room to adjust the post up or down should you need to without having the bottom of the post protruding below the bottom of the deck joists.
2. The other way is to cut the exact distance needed above deck and below deck, just like number 1 above, but bring it flush with the bottom of the deck joists.

Tip: When painting, most exterior good quality lumber contains tannins, or acids in the wood that can bleed through unless you use an oil base primer to stop the tannins from bleeding through.

3

There are various methods to make sure the post is plumb, or perpendicular to the railing system. One possible method is to use screws to ensure the post is perfect. If after it is exactly where you want it, then you can use other hardware methods. An alternate to screws mentioned below would be several clamps until your permanent hardware is installed.

Screw Method: Begin by driving (1) screw into the post, then go upto the deck and use your level to ensure the post is plumb. Drive another screw into the post and go back up to the deck and check your plumb again, adjust as necessary. This seems like a lot of back and forth, but is necessary for a correct installation. Repeat until satisfied.

Your screw pattern should be a minimum of (5) 3" exterior deck screws per sides "A" and "B", and for aesthetics a minimum of (2) 3" screws from side "C" at the fascia board. See below pattern configuration. Angling the screws slightly will strengthen the screw hold.

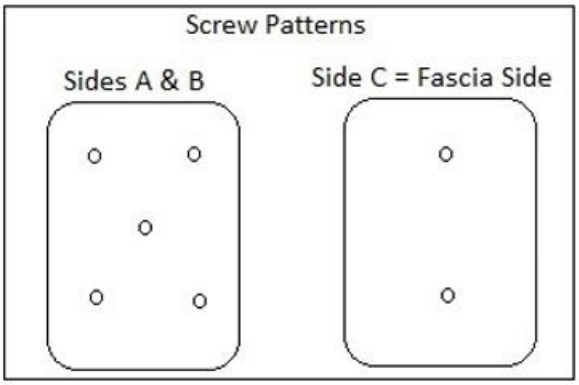

Reference the drawing shown on page 5

Step 1: Installing Posts – Continued

If cutting your posts after install, you will need to cut your posts now, so the top rail will be flush

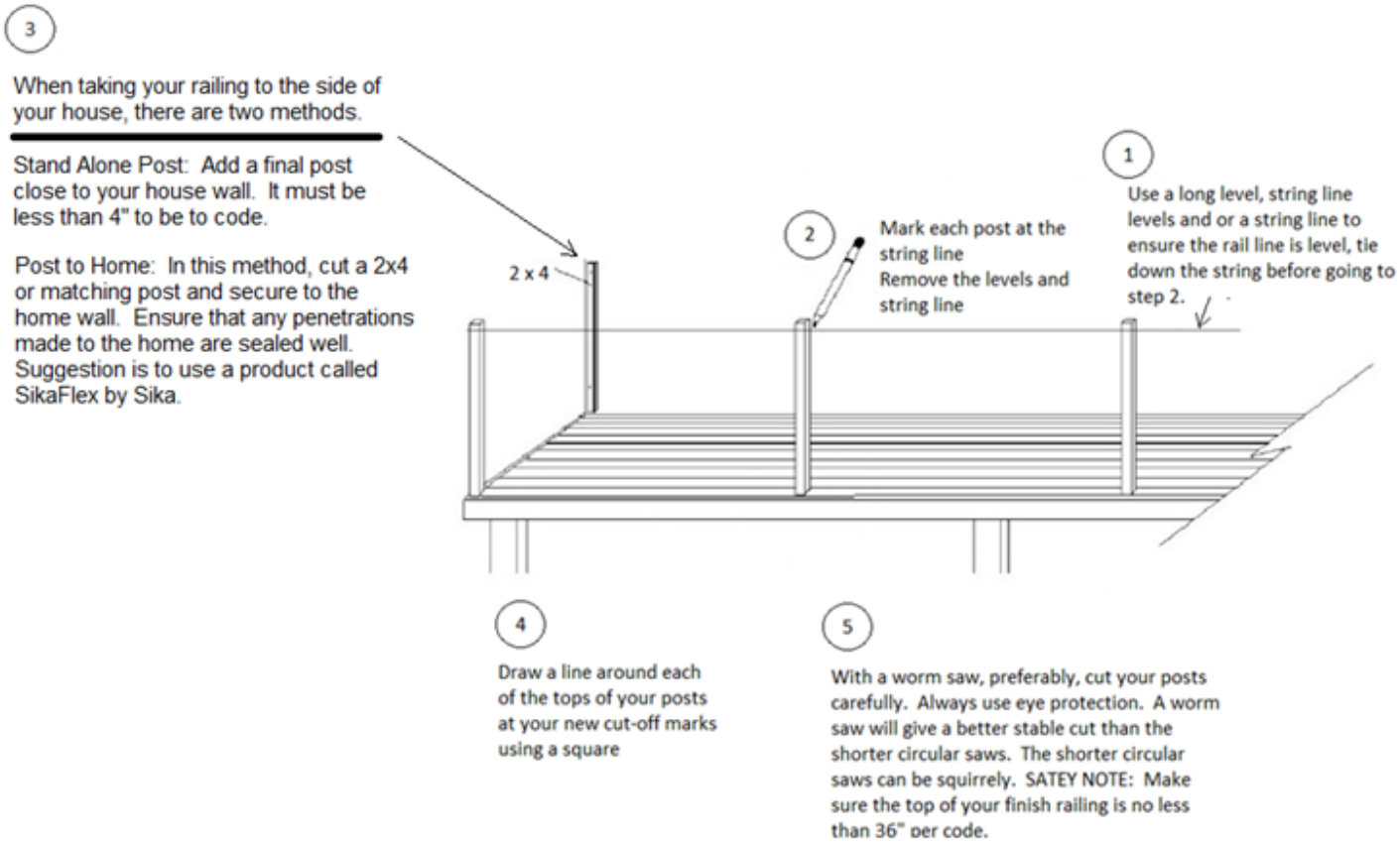

Tip: When slightly adjusting a position of a railing or wood before it is secure, always use a hammer that has a flat head surface. A non-metal head mallet is typically the best. Using a block of wood between the hammer and the railing will be the best method so as to not mar the railings with the hammer marks.

Step 2: Installing Upper and Lower Main Rails

The Top Rail:

Place a level on the top rail before attaching to ensure you have a nice level surface.

The top rails in this design is typically centered on the 4x4 posts. You can attach the top rails by either drilling down (a stronger method) or coming up from the posts into the railing. If you drill down, it is always good to pre-drill the ends so to alleviate stress that could split the ends. Doweling can make a nice finished product as it will hide the screws.

The Lower Rail:

The Lower Rails: It is very important to note that there is hardware available to assist in making the rail to post connection stronger. Check online and your local hardware stores for available options. The below method has been used by contractors for a long time if installed correctly.

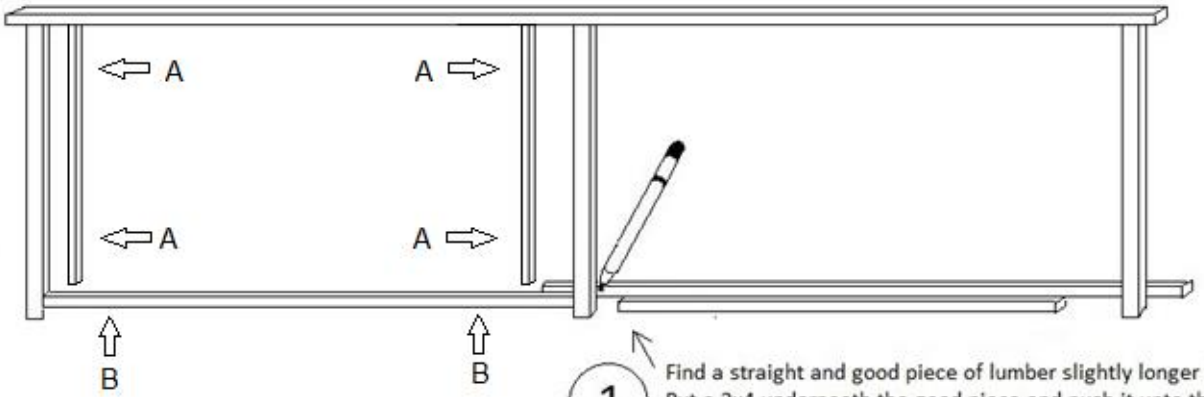

1 Find a straight and good piece of lumber slightly longer than the posts. Put a 2x4 underneath the good piece and push it upto the edge of the posts. Mark the edge on both inside posts. Then cut. Once cut ensure a good tight fit. Your posts should be stout and should not move when you fit the 2x4 in place. Again put the temporary 2x4 underneath the fitted piece as a spacer. If too tight, do not force, cut ever so slightly and try again until a snug fit.

2 After cutting your bottom rails to length, use Fence Quarter's Distance Separator, the MEASURE NOT ™, for purchase at www.FenceQuarter.com to obtain an exact distance between

your upper and lower main rails. Fence Quarter's Distance Separator, also called the Measure Not, will give you an exact 30.5" spacing. Add 3" for the thickness of the Main Rails and 2.5" between the deck surface and the underside of the lower Main Rail, and you have an exact 36" Deck Railing (See the below Cross Section Height Configuration) – Pretty Slick.

Using the Measure Not is very simple. After the Upper Main Rail is installed, take one of the two Measure Not's and place it against the post and slide it upward until it butts up against the underside of the Upper Main Rail. Clamp it well. Do the same on the opposite post as indicated in the drawing above on page 9 with "A". Then take your fitted Lower main Rail and butt it up to the underside of the Measure Not "B", then attach the Lower Main rail to the posts.

Should you decide to hide the screws, you can use a jig or freehand a pilot hole angling the hole from the post into the top railing. Keep in mind, your railing should be strong, so you do need to follow our warning on page 1 of this manual.

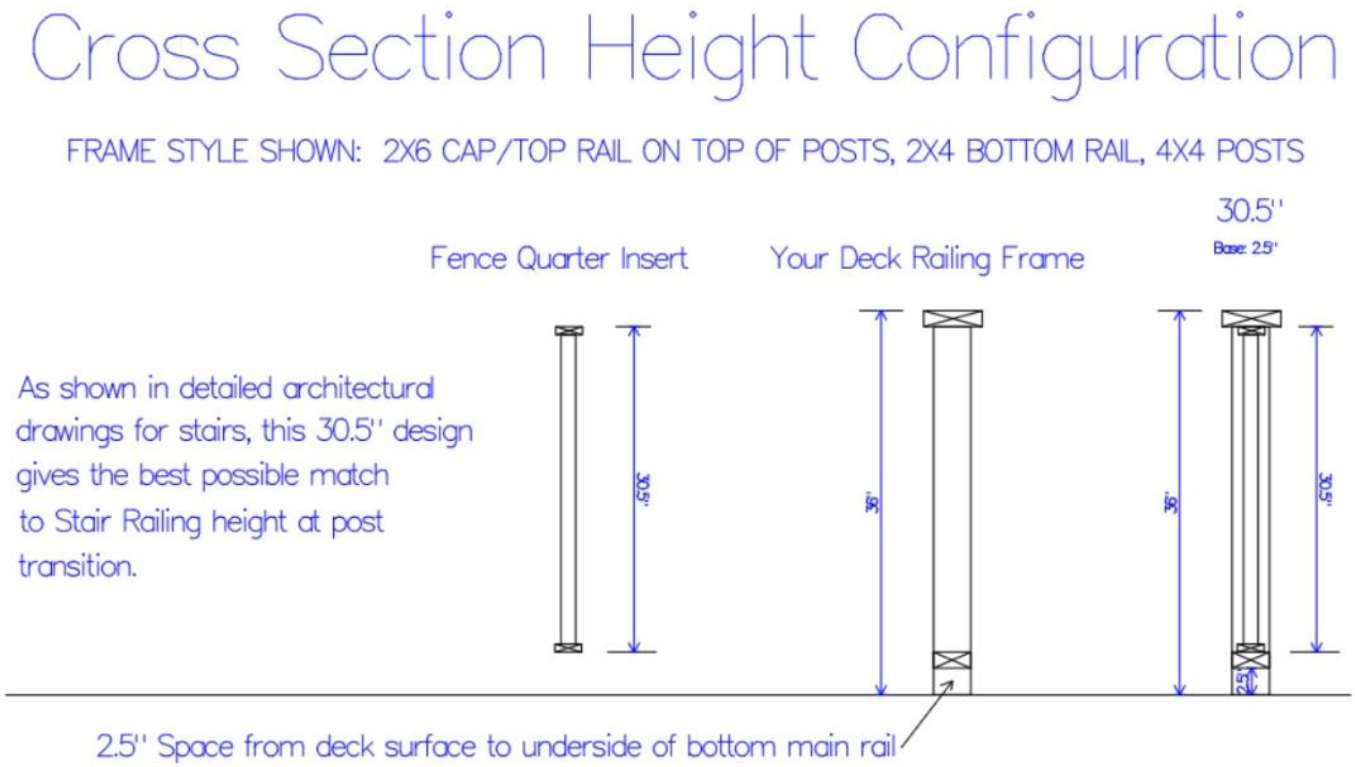

For Safety, please make sure you read the first page of this manual

Tip: We prefer to use the Kreg Brand "Stepped Drill Bit" to pre-drill. It is VERY IMPORTANT to drill within the parameters of the "Railing Inserts" See below diagram. Then insert (2) 3" Exterior Deck screws through the main rail end and into the post. If unsure, please consult a Licensed Contractor. Dap the holes with a water proofing agent like Thompson's Waterseal or like product.

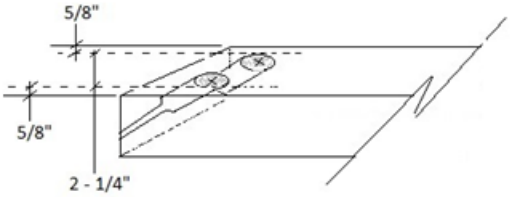

Step 3: Deck Railing Inserts

This is where the challenge takes place… as you are to

- Make sure all balusters are plumb and spaced apart so a 4" sphere may not fit through, hence under 4" apart
- Secure each baluster to the upper and lower main rail
- And, try to make sense out of the stair railings
- Prime and Paint if desired

WOW, This is becoming a chore, and to assemble it all in the time frame that makes sense….

Fence Quarter's Deck Railing Inserts allow you to easily measure, order, and forget about the details. Once delivered, installation is a breeze and takes just a few hours.

Visit www.FenceQuarter.com. If you should have any questions, we are glad to help, just give us a call: 800-205-0128

PST: M-F 8:00am - 5:00pm, Sat 9:00am – 12:00 Noon
EST: M-F 8:00am - 5:00pm, Sat 9:00am – 12:00 Noon

It is our job to make the best Wood Deck Railing Insert on the market

We think we have achieved that goal

We think you will agree!

For Safety, please make sure you read t page of this manual

Why a Fence Quarter Product?

A Fence Quarter Deck Railing Insert is designed and built with the most discerning of customer requirements in mind.

Built Stronger

- Depending on the model and style, average screw count per foot is 10-15
- Balusters will not twist or turn
- No Knots. Knots can weaken the balusters and give way
- Sheer Strength Patent Pending hardware, the "Fail Not" gives the railing that extra degree of security, (Optional)

Built to Last

- We only use Alaskan Yellow Cedar, more resistant than Western Red Cedar to rot and insects
- We hand select the lumber for strength and appearance
- Our primers from Sherwin Williams and application process are designed to adhere to the lumber better than any other product and process on the market (Optional)
- We spray two top coats of paint using Sherwin Williams premium products (Optional)

Built Smart

- Fast and Easy to install and easily removable for maintenance
- Location tags are on each railing